TRANSISTOR RADIO APPARATUS

Filed March 25, 1955 2 Sheets-Sheet 1

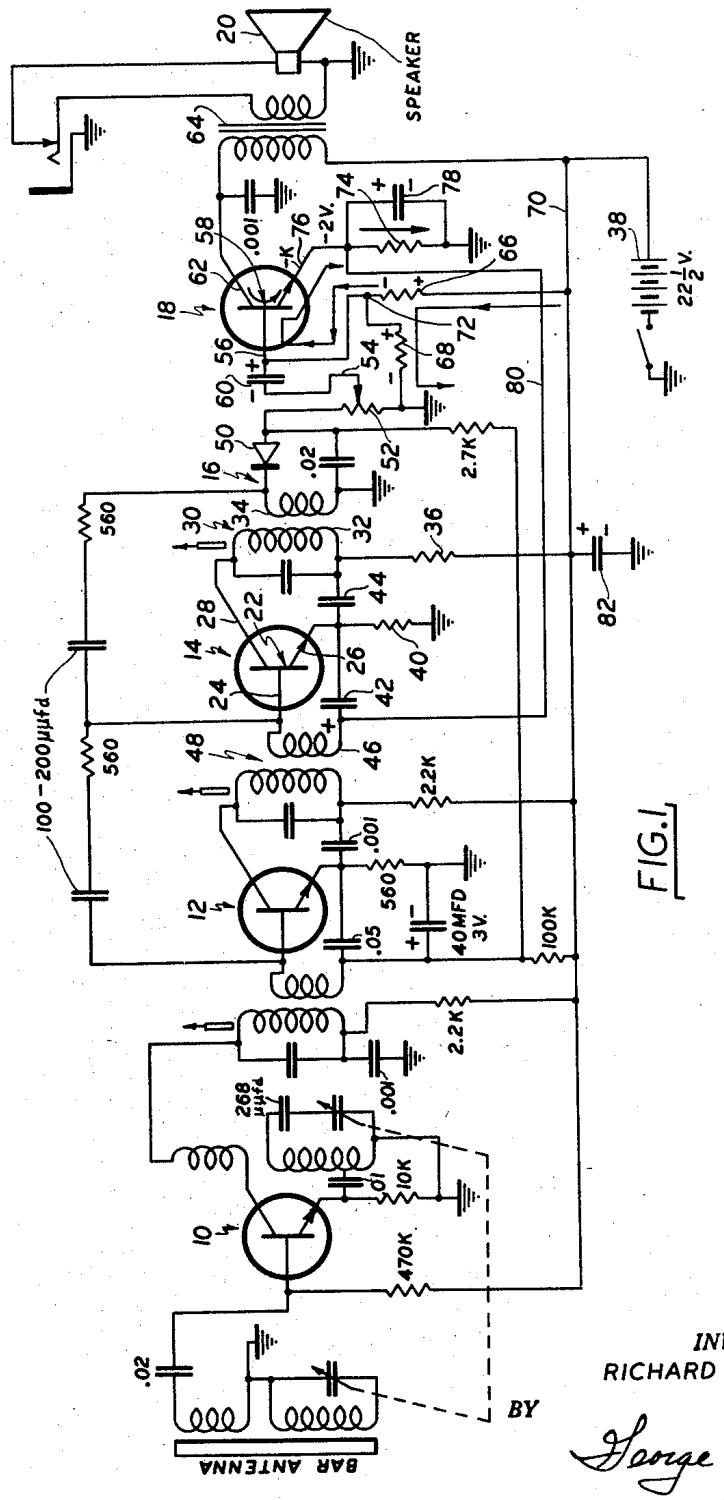

FIG. 1

INVENTOR.
RICHARD C. KOCH
BY George A. Gust
ATTORNEY